TRESPA

Installation guidelines for façade applications

Trespa Meteon is a flat panel based on thermosetting resins, homogenously reinforced with wood fibres and manufactured under high pressure and temperature. Using special techniques, the panels have an integrated, decorative surface with pigmented resins.

Trespa International B.V. is the only manufacturer that cures the surface of panel material for external applications using electron beams (Electron Beam Curing). That's what makes Trespa Meteon so highly weather resistant.

The resultant properties make the product particularly suitable for a wide range of exterior applications.

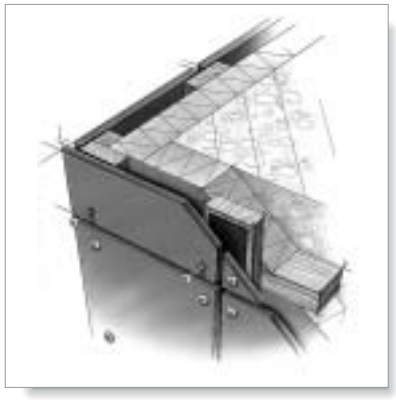

Sheet thickness and weight

Thickness	*Weight*
6 mm	*8.4 kg/m²*
8 mm	*11.2 kg/m²*
10 mm	*14.0 kg/m²*
13 mm	*18.2 kg/m²*

Sheet sizes

- 3650 x 1860 mm
- 3050 x 1530 mm
- 2550 x 1860 mm

Colours

Sheets for façade applications are supplied in more than 50 standard colours.

Properties

- Weather-resistant
- Colourfast
- Impact resistant
- Easy to clean (even graffiti)
- Scratch resistant
- Low maintenance
- Wide range of colours
- Easy to machine (can be undertaken on site)

®TRESPA

All the best qualities in one panel

Fabrication and installation of Trespa Meteon Metallics and Naturals.

- Trespa Meteon Metallics and Naturals panels feature a directional coloured surface. In order to achieve the same orientation of the panels please take notice of the following points:
- When optimizing Trespa Meteon Metallics and Naturals panels the direction should always be taken into account. Arrows on the back side of the full size panels have been applied by Trespa to indicate the direction the sheets have been produced (illustration 1).
- When cutting the sheets we advise you to temporarily mark the original production direction on the visible side of the individual panels. The fixing of the panels in the same direction wil be easier and this way there will be no undesirable colour distinction (illustration 2). All other instructions for processing and fixing are as standard Trespa Meteon panels.
- Corner profile and sheet lenghts have corresponding direction.
- The quantity of Trespa Meteon Metallic sheets required for a project should be ordered and supplied as a single instruction.

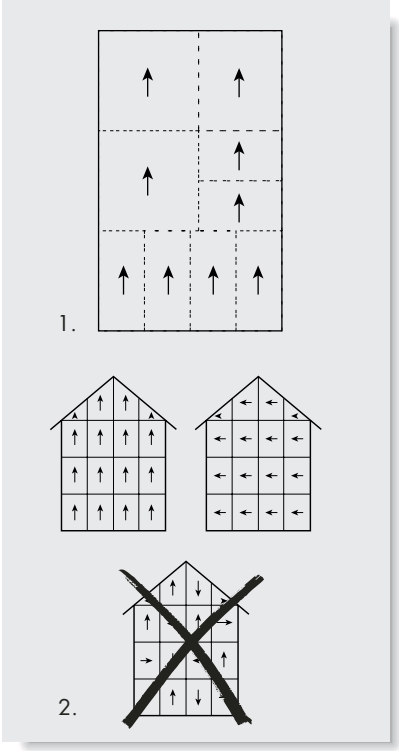

General instructions

- **Certificate:**
  BBA, Agrément Certificate no. 91/2628.
- **Guarantee:**
  On request for a period of 10 years.
- **Ventilation:**
  The ventilation provisions below apply:
  • A ventilated air cavity at least 20 mm wide;
  • Ventilation openings at the top and bottom of the facade cladding, windows and fascias.

Façade cladding height	*Ventilation surface*
to 1 m	*≥ 20 cm²/m¹ for fascias*
above 1 m	*≥ 50 cm²/m¹ for façades*

  • Local openings minimum 5 mm.
  • Openings wider than 10 mm to be closed with ventilation profiles.
- **Joints:**
  The joint width is minimum 10 mm + thickness of possible joint profiles.
- **Fixings:**
  Centralise screws and do not overtighten as this will obstruct the movement of the panel.
  (N.B.: machines with a depth stop are available for this purpose).
- Before mounting the panels, the contractor and/or fitter must establish the durability, strength, stiffness, stability and smoothness of the underlying construction. These characteristics of the underlying construction must comply with any national or local construction rules and regulations, guidelines and specifications.

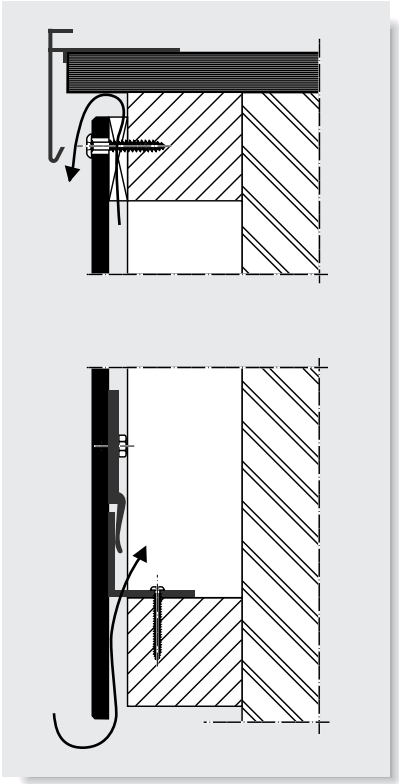

®TRESPA

All the best qualities in one panel

Processing

Cutting

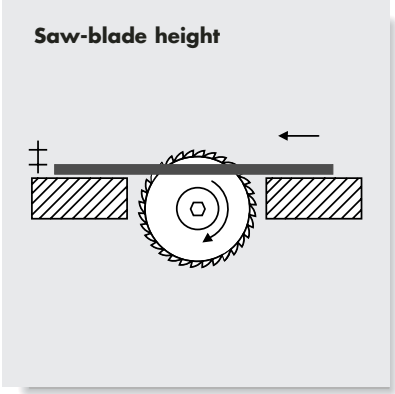

- **Hand circular saw:**

Diameter	*Teeth*	*Speed*	*Blade thickness*	*Saw-blade height*
150 mm	*36*	*4,000*	*2.5 mm*	*15 mm*
200 mm	*46*	*4,000*	*3.0 mm*	*20 mm*

- **Stationary circular saw:**

Diameter	*Teeth*	*Speed*	*Blade thickness*	*Saw-blade height*
300 mm	*72*	*6,000*	*3.4 mm*	*30 mm*
350 mm	*84*	*5,000*	*4.0 mm*	*35 mm*
400 mm	*96*	*4,000*	*4.8 mm*	*40 mm*

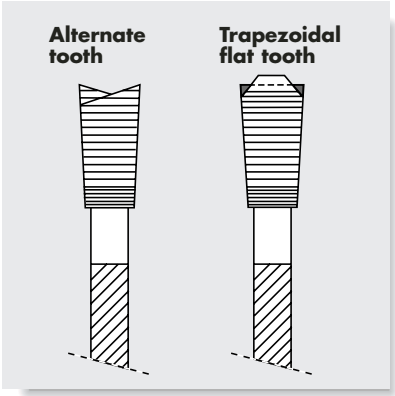

- **Feed:**
  7 - 22 m/min.

- **Tooth:**
  Hard metal wood-working tools, carbide-tipped alternate tooth or trapezoidal flat tooth.

- **Jig saw:**
  Carbide-tipped saw; interior corners of cut-outs should be drilled with 6 mm hole diameter.

- **Entering tooth:**
  At the decorative side of the panel.

- **Cut edges:**
  The best results are obtained with stationary tools; any sharp edges can be removed with sandpaper.

- **Rake angle:**
  A rake angle of 45° gives the best cutting performance.

Drilling

- Carbide-tipped HSS-drill, top angle 60-80°.
  Panels should be drilled with support sheets.

Diameter	*Revolutions*	*Feed*
5 mm	*3,000*	*60-120 mm/min*
8 mm	*2,000*	*40-80 mm/min*
10 mm	*1,500*	*30-60 mm/min*

Transportation and storage

- During transportation, use stable flat pallets at least the same dimension as the sheets.
- When moving a sheet, lift it to prevent scratches on the panel surface.
- The sheets should be stored in an enclosed area, protected against moisture and heat, in a normal ambient temperature and humidity.
- For horizontal storage on pallets, the sheets should be supported over the entire surface with a protective layer between the pallet and the sheet and also on the uppermost sheet.
- For vertical storage the sheets should be upright on their sides and be supported over the full height.
- Stickers should be removed before installation.

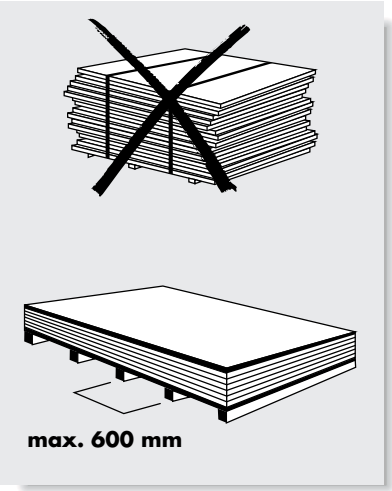

TS150: Visible fixing with screws

- **Timber battens:**
  Impregnated timber battens at least 38 x 45 mm;
  for intermediate battens at least 38 x 75 mm at the panel joints.
- **Fixings:**
  Fast-fixing screws for Trespa:
  • 8 mm hole diameter;
  • for 6 to 10 mm panels;
  • available in all standard colours.
- **Maximum fixing centres:**
  Distances (mm) for a building height up to 12 m:

Panel thickness	*2 fixings in one direction*	*More than 2 fixings in one direction*
6	*450*	*550*
8	*600*	*750*
10	*750*	*900*
13	*950*	*1.200*

- **Panel edge clearances:**
  Minimum 20 mm, maximum 10 times panel thickness.
- **Joint gasket:**
  Flat EPDM gasket, thickness 1mm, over full width of battens.

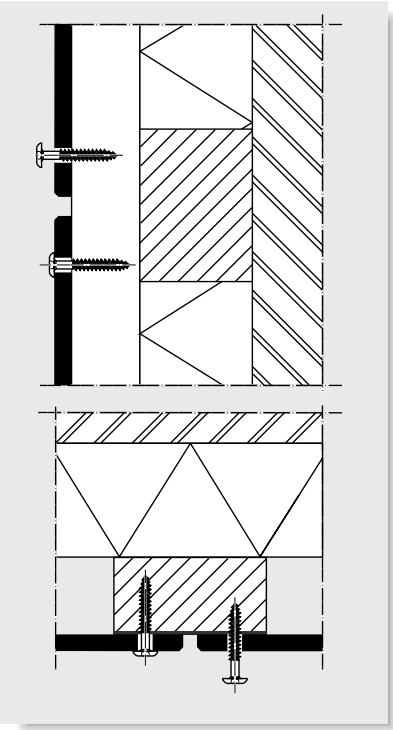

TRESPA

All the best qualities in one panel

TS450: Invisible fixing with adhesive and screws

Fixing Trespa panels to a sub-frame using adhesive is possible if:

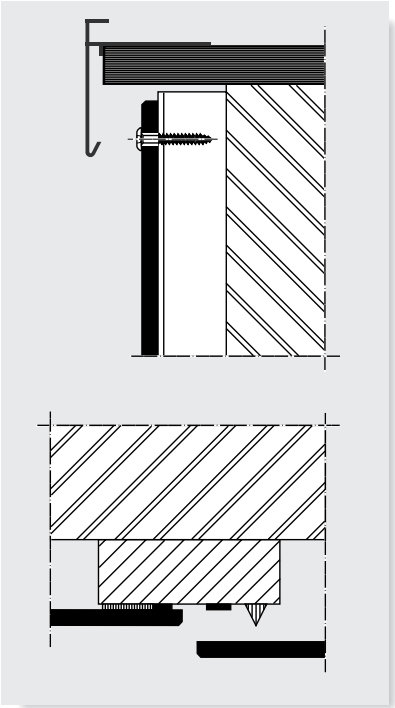

- **Fixing:**
  - Adhesive bead only vertical.
  - At least two screws are used at the top edge of each panel, 8 mm hole diameter.
  - Maximum panel length: 2550 mm.
  - Maximum panel surface 2.5 m².
    Instructions for Trespa Construction Adhesive as recommended by the manufacturer should be followed.
- **Timber dimensions:**
  Minimal width of planed timber battens:
  - End battens: 45 x 28 mm.
  - Intermediate battens: 55 x 28 mm.
  - Panel joint battens: 85 x 28 mm.
- **Maximum fixing centres:**
  Distances (mm) for a building height up to 12 m:

Panel thickness (mm)	*2 adhesive beads*	*More than 2 adhesive beads*
6	*450*	*550*
8	*600*	*650*
10	*650*	*650*

System 700: Visible fixing with blind rivets

Fixing panels of min. 6 mm thickness on a metal sub-frame is possible with blind rivets. The sub-frame should preferably consist of vertical aluminium profiles which are fixed to the structure with special wall brackets.

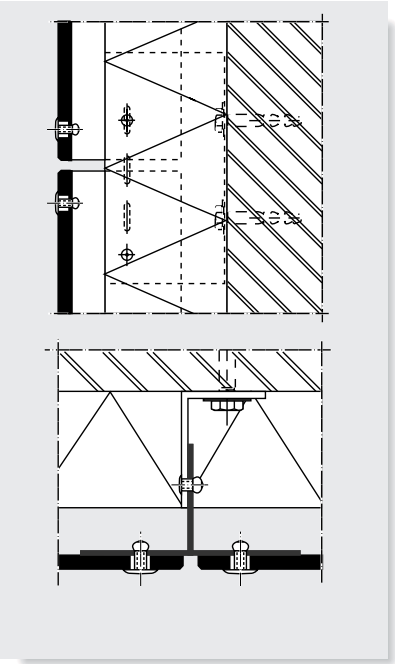

- **Fixings:**
  - Rivets: diameter 5 mm; hole diameter in panel 10 mm;
  - One hole of 5.1 mm in centre of panel; 2 fixed points may be made next to each other with a hole of 6 mm.
- **Maximum fixing centres:**
  Distances (mm) for a building height up to 12 m:

Panel thickness	*2 fixings in one direction*	*More than 2 fixings in one direction*
6	*450*	*550*
8	*600*	*750*
10	*750*	*900*
13	*950*	*1.200*

- **Panel edge clearance:**
  Minimum 20 mm, maximum 10 times panel thickness.
- **Panel size:**
  Maximum 3050 mm.
- **Tools:**
  The rivet head should be 0.3 mm free from the panel surface by using a sliding point attachment.

TS200: Invisible fixing with screws or inserts

Panel of minimum 8 mm can be fixed invisibly by using aluminium brackets with inserts or screws to the back of the panel. The panel is then hung on a horizontal aluminium rail. Each panel has two adjustable brackets and a fixed point at the top. The bottom row or rows of brackets are fixed 2.5 mm/m[1] higher to enable the panel to move.

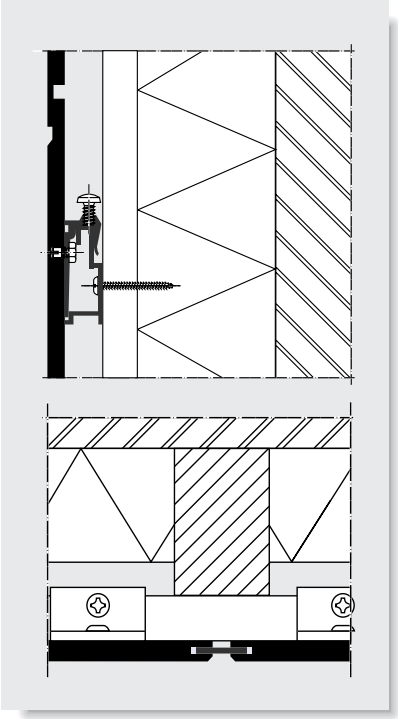

- **Fixings:**
  The fixing systems and accessories are supplied by specialist companies. These companies also provide advice on auxiliary materials. Suppliers of Norsk Hydro can be obtained by contacting Trespa UK Ltd.

- **Maximum fixing centres:**
  The fixing centres are determined for each project in consultation with the profile supplier.

Panels in frames

Panels can be placed into timber, metal or plastic frames.

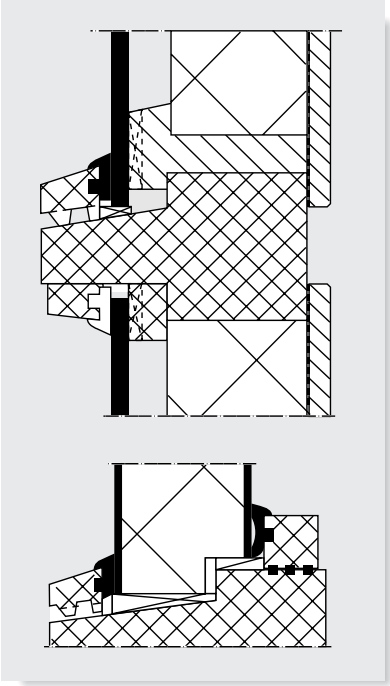

- **Positioning:**
  - Panel edge: at least 6 mm free from profile at three sides
  - Groove: 20 mm.
  - EPDM glazing gaskets, at least 4 mm thickness after installation.
  - Drainage: hole diameter 8 mm or slots 5 x 25 mm.
  - Two support blocks for each panel: minimum 5 x 50 mm.

- **Maximum span of single panel:**

Maximum width (in mm)	*Panel thickness (in mm)*			
length/width relation	*6*	*8*	*10*	*13*
1.0	*620*	*830*	*1040*	*1350*
1.5	*530*	*710*	*890*	*1160*
2.0	*470*	*630*	*780*	*1020*
≥ 2.5	*450*	*600*	*750*	*980*

- **Maximum span of sandwich panel:**
  - Panel thickness: minimum 16 mm.
  - Maximum spans om request available.

TRESPA

All the best qualities in one panel

Additional information about Trespa Meteon can be obtained from:

Trespa UK Ltd
Grosvenor House
Hollinswood Road
Central Park, Telford
TF2 9TW
Tel.: 44 (0) 1952 290707
Fax: 44 (0) 1952 290101
Info@trespa.co.uk

Export Department
Europe/Middle East/Asia/Pacific
Tel.: 31 (0) 495 458 359 / 392 / 578
Fax: 31 (0) 495 458 383
infoexport@trespa.com

Registered trademarks

® Trespa, Meteon, Athlon, Toplab, Virtuon, Volkern, Ioniq and Inspirations are registered trademarks of Trespa International BV.

Responsibility

All information is based on our current state of knowledge. It is intended as information concerning our products and their application possibilities, and is therefore not intended as any form of guarantee with regard to any specific product characteristic.

Copyrights

© All rights reserved. No part of this publication may be reproduced, stored in a retrieval system, or made public, in any form or by any means, either graphic, electronic or mechanical, including photocopying, recording or otherwise, without the prior written permission of Trespa International BV.

Trespa guarantees quality of both products and services. We offer our customers optimal technical support as well as straightforward documentation. Proof of this approach is the award of the ISO 9001 and ISO 14001 certificates.

Whatever your requirements, Trespa offers a full support service. Please contact us for further information.

Conditions of Sale

To all our offers, quotations, sales, deliveries and supplies and/or agreements, and to all related services and activities the Trespa International B.V. General Conditions of Sale apply, filed at the Venlo Chamber of Commerce on 1 January 2004, registered under number 24270677, and appearing on the website at www.trespa.com. The text of these General Terms and Conditions will be sent to you upon request.

www.trespa.com

U011

Zandbeek Communication Group (NL) 0204/1000